Development of cloud-based virtual desktop environment for synthesis and analysis for ecosystem science community

Siddeswara Guru, Hoang Nguyen, Shilo Banihit, Matt Mulholland, Kim Olsson & Tim Clancy

Presentation by Siddeswara Guru

TERN is supported by the Australian Government through the National Collaborative Research Infrastructure Strategy and the Super Science Initiative.

Outline

- Motivation
- System Overview
- Application
- Conclusion

TERN
Terrestrial Ecosystem Research Network

Typical Analysis and Synthesis

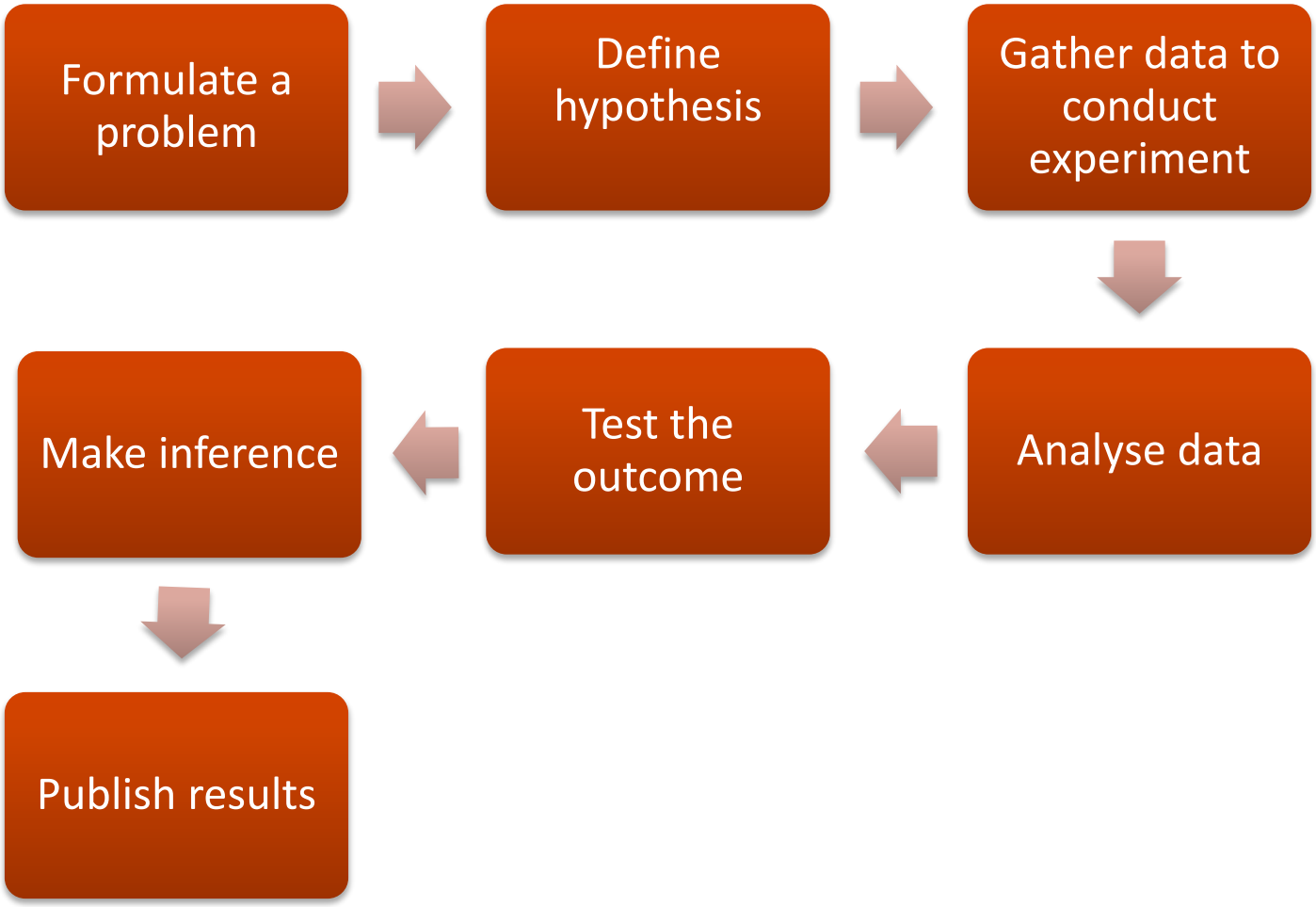

TERN
Terrestrial Ecosystem Research Network

Computational Options

Option 1:

- Tools: Matlab, R, python, statistical packages etc,.
- Individual programs run separately to conclude the meta-analysis.

Advantages

- Develop in any desktop environment
- Lower barrier for running analysis

Disadvantages

- Reproducibility and transferability is not that easy

```
cacheSolve <- function(x, ...) {
        ## Return a matrix that is the inverse of 'x'
    m <- x$getinverse()
    if(!is.null(m)){
        message("getting cached data")
        return(m)
    }
    data <- x$get()
    m <- solve(data,...)
    x$setinverse(m)
    m
}
```

TERN
Terrestrial Ecosystem Research Network

Computational options

Option 2

Use of scientific workflow

- Series of structured interconnected computational activities
- Visual front-end to build experiments using components.
- Components can be implemented in high-level and/or scripting languages.

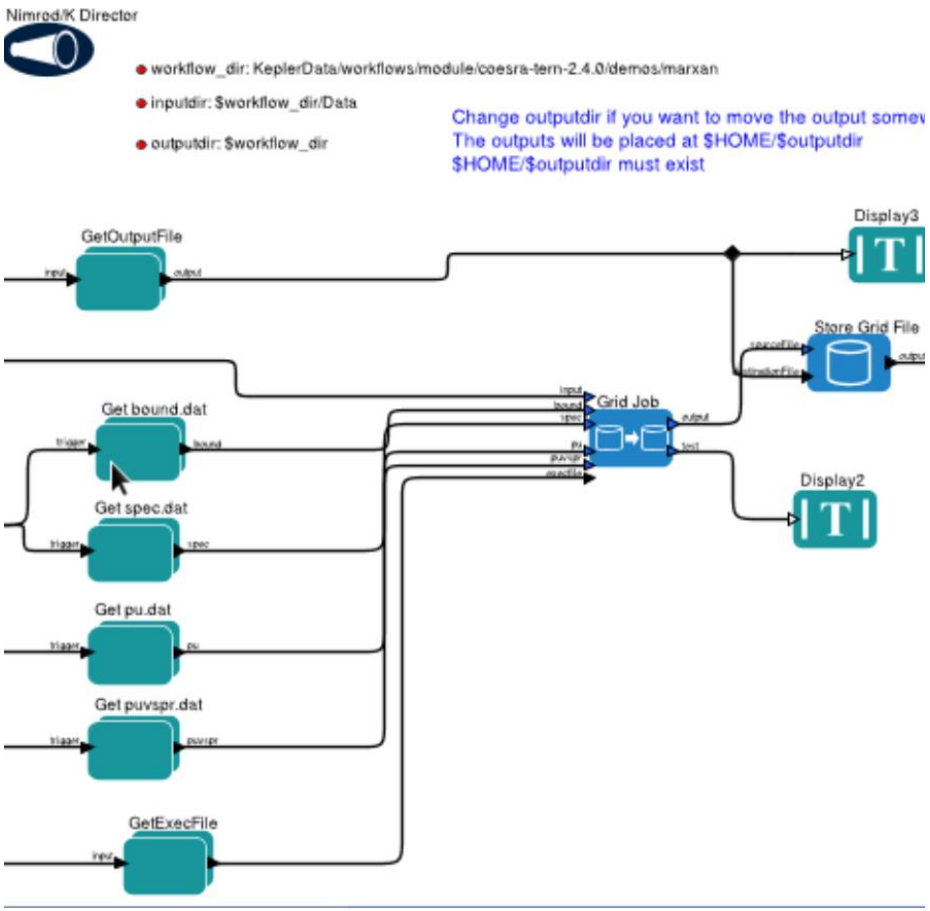

Computational options

Popular Workflow systems

- Kepler, Taverna, Galaxy, VisTrails, Triana

Advantages:

- GUI interface to compose workflow
- Ability to create components in different programming languages
- Easy to run workflows as distributed tasks
- Ability to track and collect provenance information
- Platform independent re-usable experiments
- Possibility of repeatability and reproducibility

TERN
Terrestrial Ecosystem Research Network

Computational Options

Disadvantages:

- New tool to learn
- Strong informatics focus

TERN
Terrestrial Ecosystem Research Network

Challenge - Research infrastructure

NeCTAR and RDSI

- Cloud-based research infrastructure
- Based on merit-allocation
  - Apply for compute allocation from NeCTAR research cloud
  - Apply for storage allocation from RDSI
- Based on Infrastructure as a Service
  - Compute and storage resource over the Internet
- Users build and manage platform.

TERN
Terrestrial Ecosystem Research Network

No need to do any of these things but able to access the platform via a browser

TERN
Terrestrial Ecosystem Research Network

CoESRA Home page

Registration and login via AAF

https://www.coesra.org.au/#/home

CoESRA

Collaborative Environment for Ecosystem Science Research and Analysis

Home About Features FAQ Policy Logout

Go to your Desktop

TERN Terrestrial Ecosystem Research Network

NCRIS National Research Infrastructure for Australia An Australian Government Initiative

ands AUSTRALIAN NATIONAL DATA SERVICE

TERN and ANDS are supported by the Australian Government through the National Collaborative Research Infrastructure Strategy (NCRIS)

Copyright © 2015 TERN (University of Queensland). All Rights Reserved.

TERN Terrestrial Ecosystem Research Network

Virtual Desktop on Browser

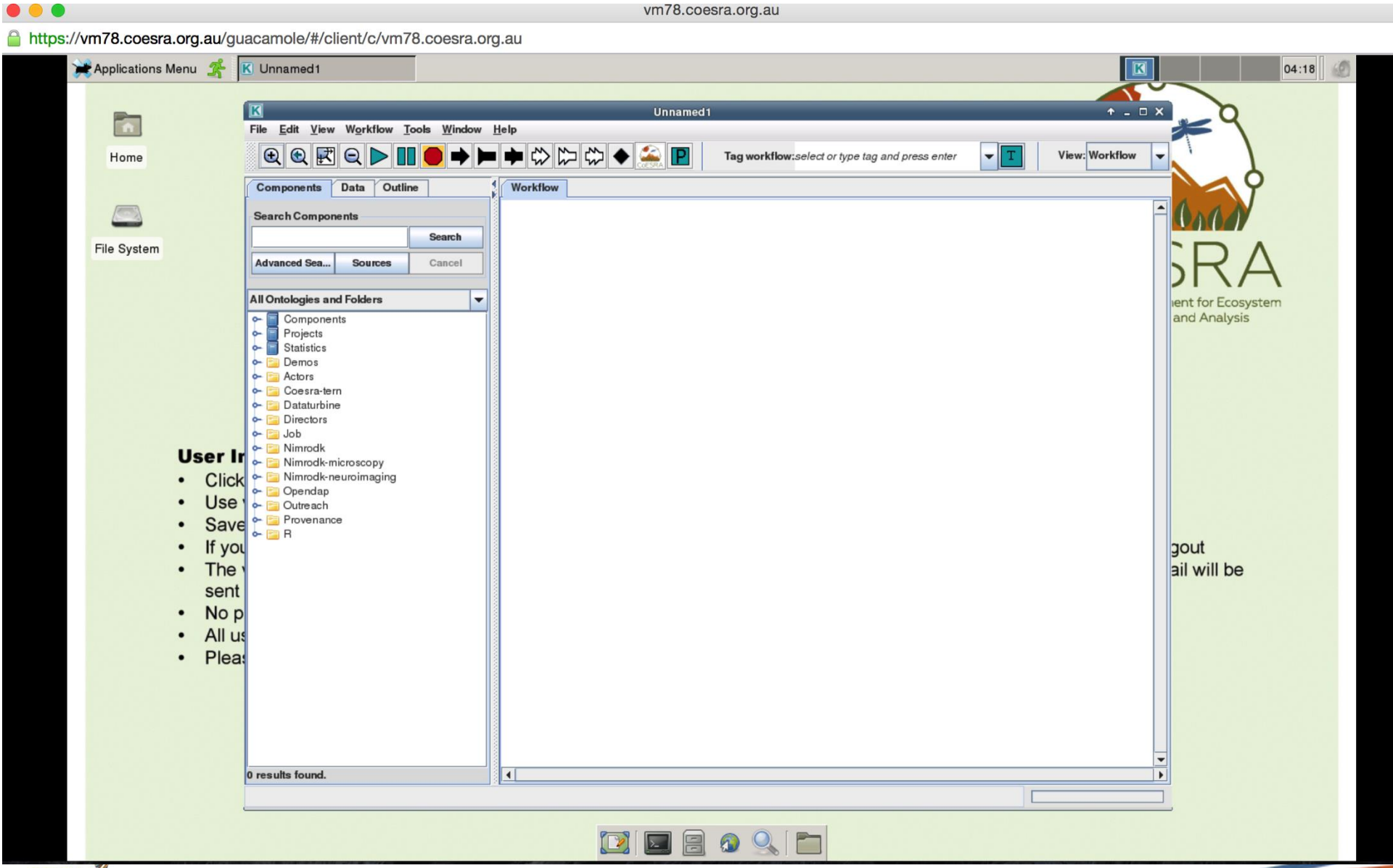

Public and Personal workspace

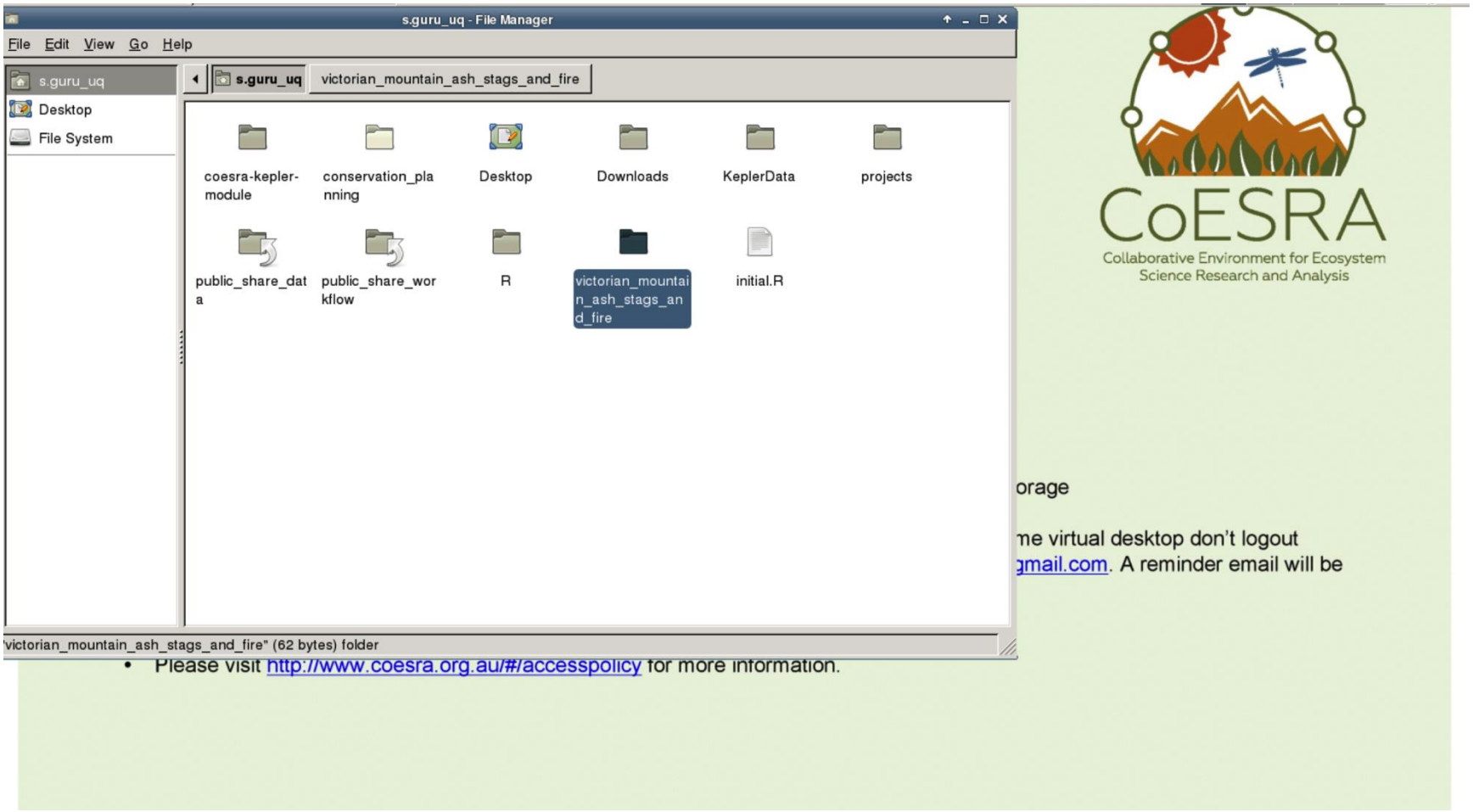

TERN
Terrestrial Ecosystem Research Network

Publish and share your workflow

TERN
Terrestrial Ecosystem Research Network

Publish your workflow

File Edit View Workflow Tools Window Help

Tag workflow: *select or type tag and press enter*

View: Workflow

Components | Data | Outline

Search Components

Search

Advanced Sea... | Sources | Cancel

All Ontologies and Folders

- Components
- Projects
- Statistics
- Demos
- Actors
- Coesra-tern
- Dataturbine
- Directors
- Job
- Nimrodk
- Nimrodk-microscopy
- Nimrodk-neuroimaging
- Opendap
- Outreach
- Provenance
- R

0 results found.

Workflow

SDF Director

IUCN Ecosystem Risk Assessment of Mountain Ash Forests, Southeastern Australia

The projectdir is intended to be the primary workspace for all the output data and results generated during this Risk Assessment.

projectdir

Share Workflow

This utility helps you to publish workflow ANDS Research Data Australia and TERN Data Discovery Portal. Before publishing, you should create a workflow record in MyExperiment.org including uploading a workflow file and get an URL for workflow.

Please see: https://www.coesra.org.au/#faq

Terms and Conditions

By creating this content and service record, you agree to the following terms and conditions: you are responsible for any content that you upload, you will be solely responsible for all your actions and CoESRA portal will not be liable for any damages or losses.

☐ Accept

Create RIF-CS Service

D: The Primary Biotic Variable

E: The Probability of Ecosystem Collapse

A: Decline in Ecosystem Distribution

B: Restricted Distribution

C: Decline in Abiotic Processes

results

Subcriteria Summary Table Showing All

Ecosystem Risk Estimates

These results are a reproduction of the IUCN Red List of Ecosystems Risk Assessment of
Burns, E.L., Lindenmayer, D.B., Stein, J., Blanchard, W., McBurney, L., Blair, D. & Banks, S.C. (2015).
Ecosystem assessment of mountain ash forest in the Central Highlands of Victoria, south-eastern Australia.
Austral Ecology, http://doi.wiley.com/10.1111/aec.12200

TERN
Terrestrial Ecosystem Research Network

Publish your workflow

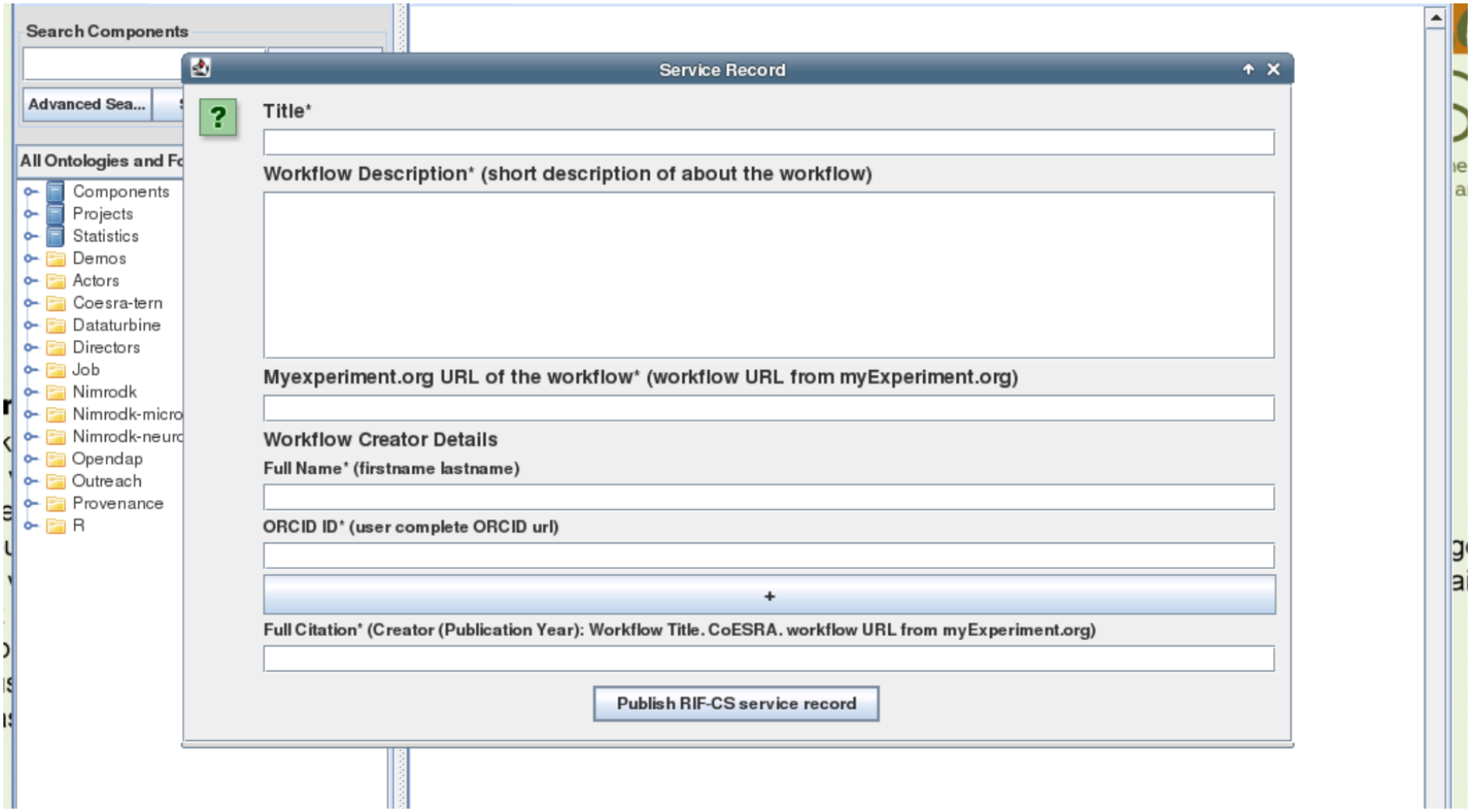

Application

International Union for Conservation of Nature Red lists of Ecosystems

TERN
Terrestrial Ecosystem Research Network

Application of IUCN Red List of Ecosystems Categories and Criteria

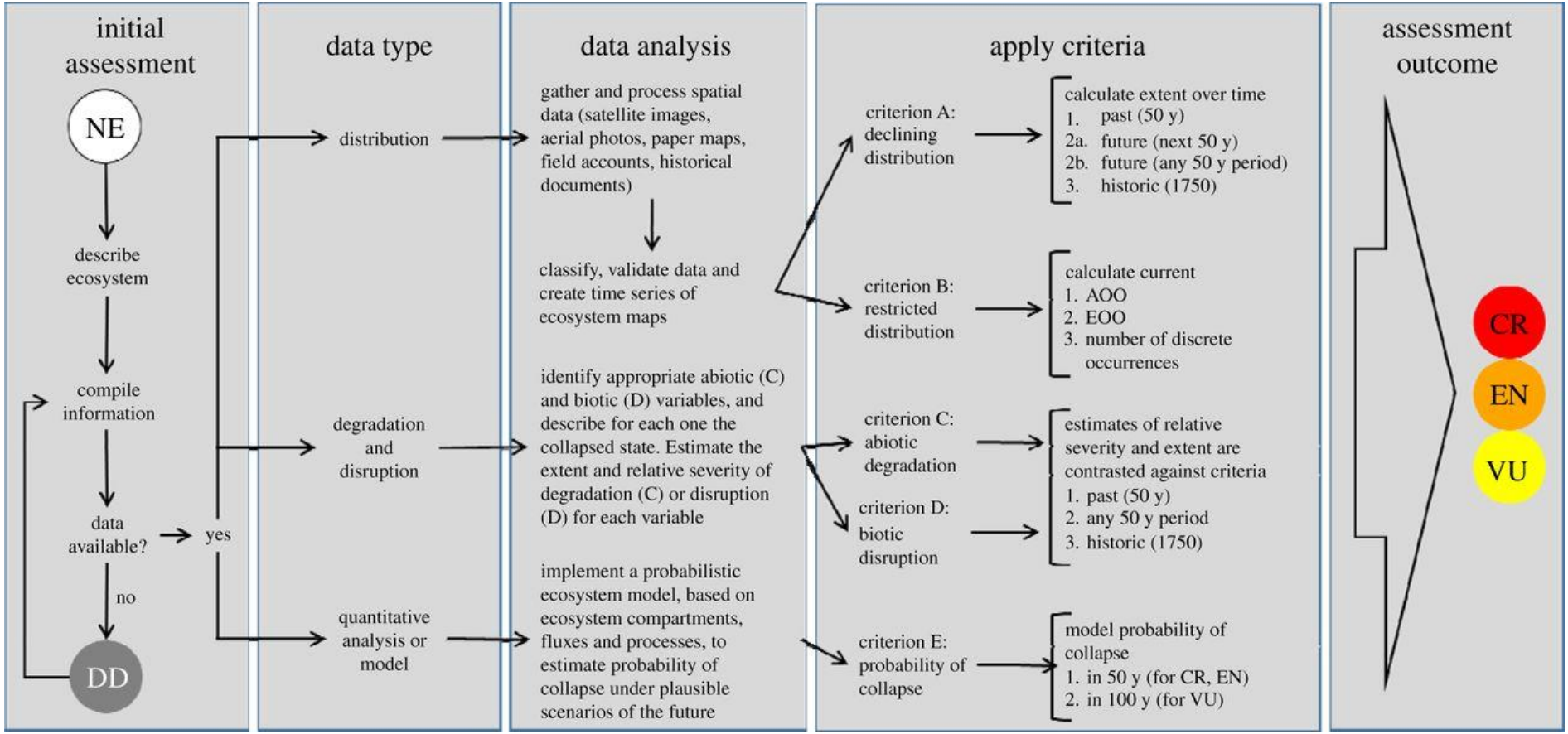

TERN
Terrestrial Ecosystem Research Network

Mountain Ash Forest Ecosystem Risk Assessment

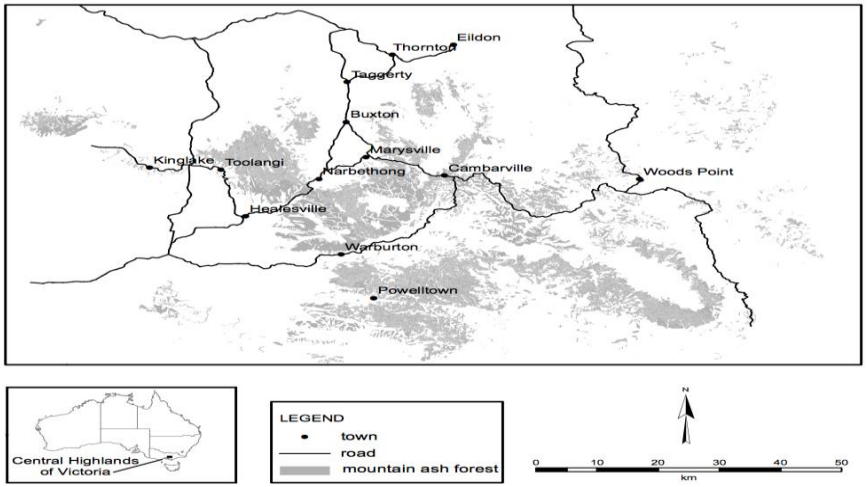

Source: abc.net.au

- Unique biodiversity,
- World tallest flowering plants (over 100 m),
- Contribute to water and timber production
- subject to wildfire.
- Apply IUCN Red List of Ecosystem criteria for risk assessment[2]

[2]Burns, Emma L., Lindenmayer, David B., Stein, John, Blanchard, Wade, McBurney, Lachlan, Blair, David, & Banks, Sam C. (2015). Ecosystem assessment of mountain ash forest in the Central Highlands of Victoria, south-eastern Australia. *Austral Ecology, 40*(4), 386-399. doi: 10.1111/aec.12200

TERN
Terrestrial Ecosystem Research Network

Mountain Ash Forest risk assessment workflow

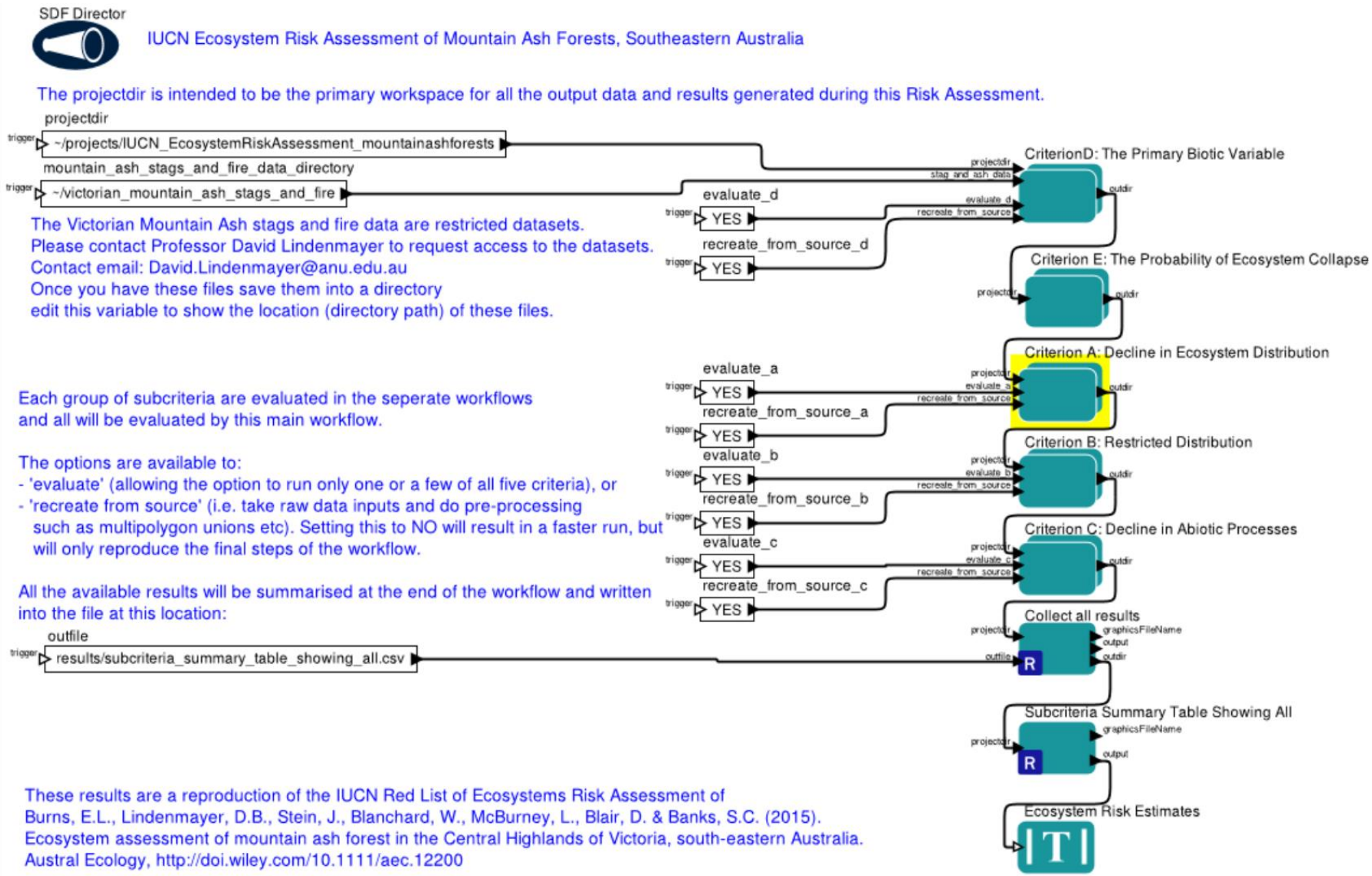

TERN
Terrestrial Ecosystem Research Network

Sub- Workflow for Criteria A

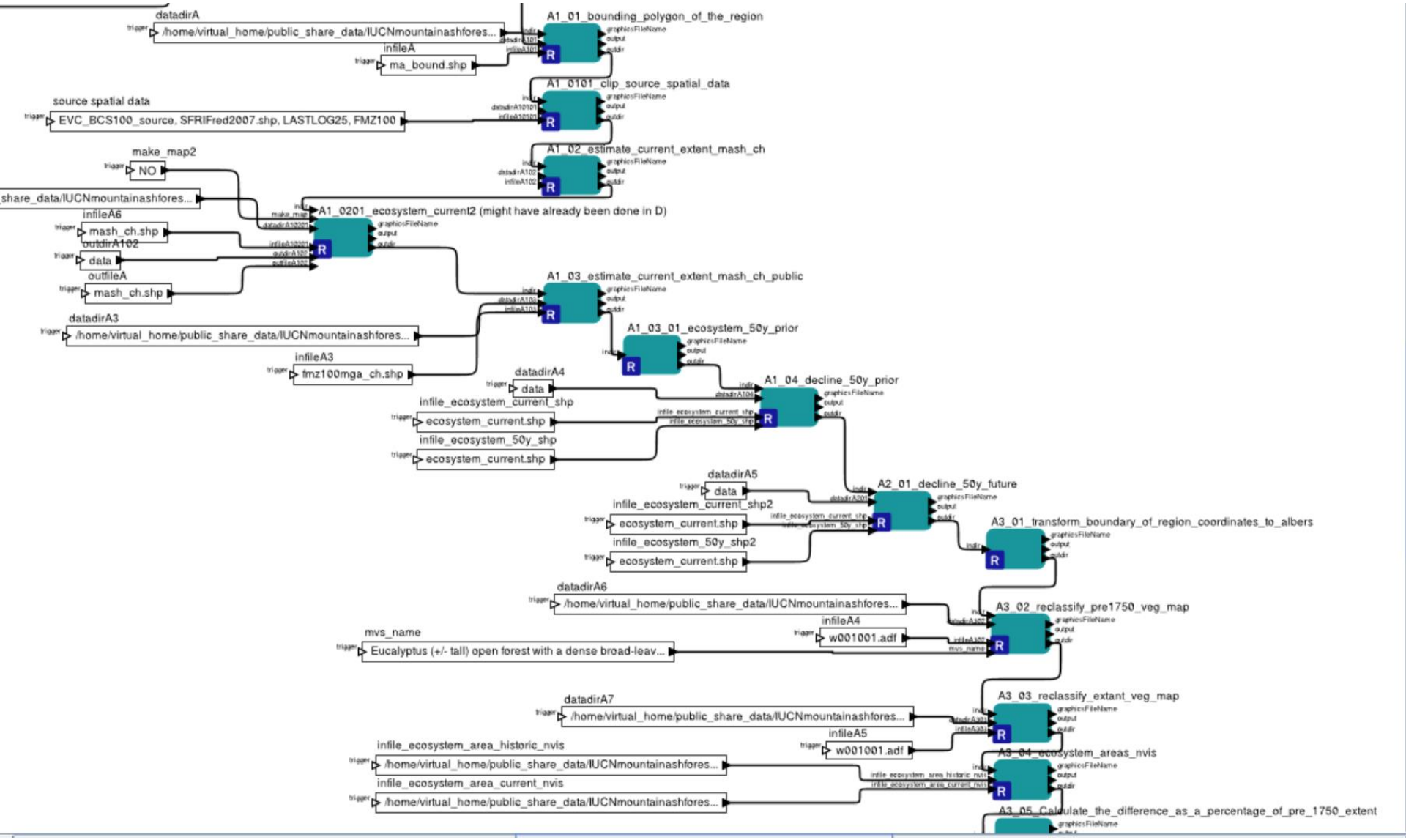

TERN
Terrestrial Ecosystem Research Network

Workflow

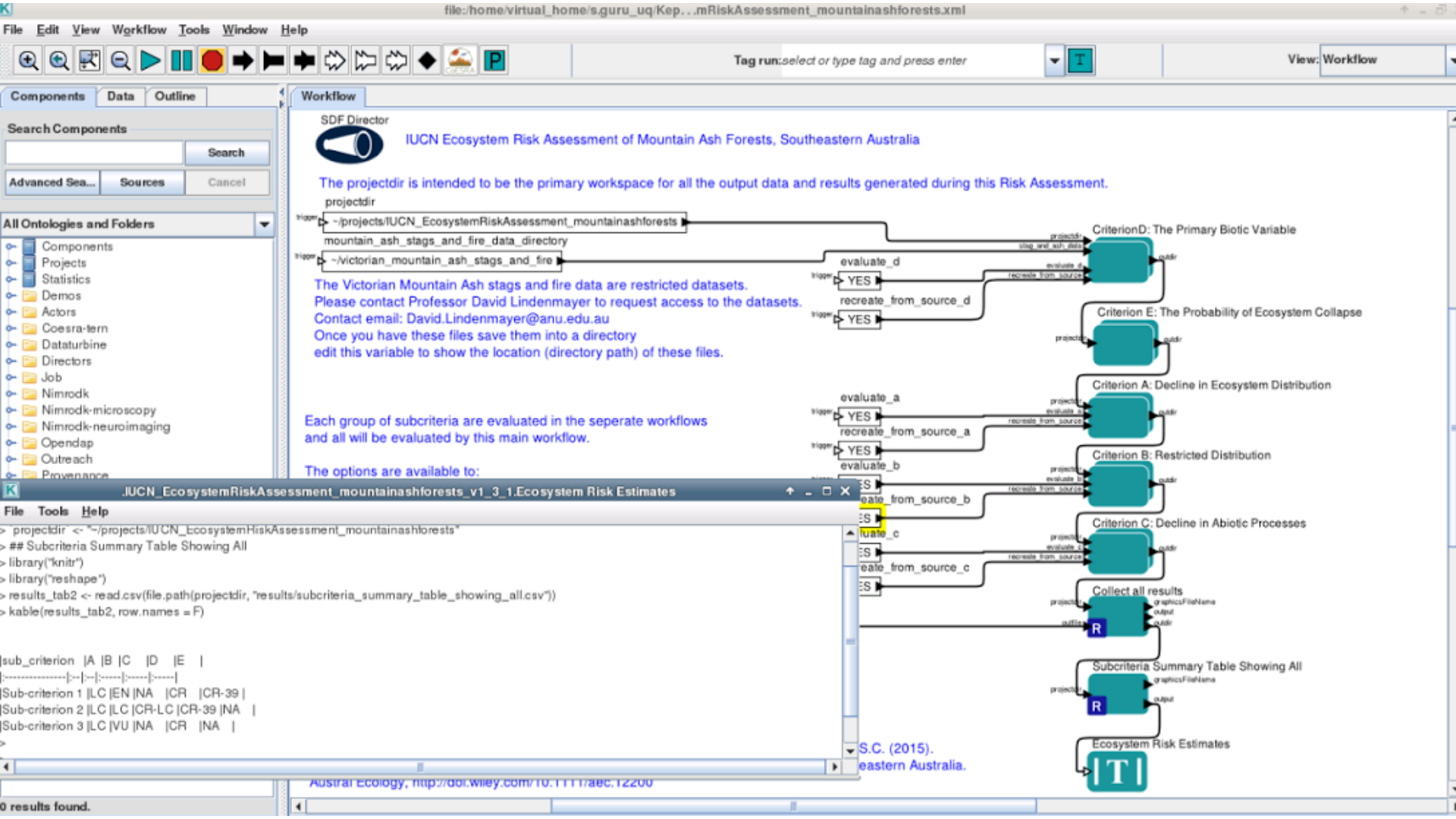
file:/home/virtual_home/s.guru_uq/Kep...mRiskAssessment_mountainashforests.xml
File Edit View Workflow Tools Window Help
Tag run: select or type tag and press enter
View: Workflow
Components Data Outline
Search Components
Search
Advanced Sea... Sources Cancel
All Ontologies and Folders
Components
Projects
Statistics
Demos
Actors
Coesra-tern
Dataturbine
Directors
Job
Nimrodk
Nimrodk-microscopy
Nimrodk-neuroimaging
Opendap
Outreach
Provenance
Workflow
SDF Director
IUCN Ecosystem Risk Assessment of Mountain Ash Forests, Southeastern Australia
The projectdir is intended to be the primary workspace for all the output data and results generated during this Risk Assessment.
projectdir
~/projects/IUCN_EcosystemRiskAssessment_mountainashforests
mountain_ash_stags_and_fire_data_directory
~/victorian_mountain_ash_stags_and_fire
The Victorian Mountain Ash stags and fire data are restricted datasets.
Please contact Professor David Lindenmayer to request access to the datasets.
Contact email: David.Lindenmayer@anu.edu.au
Once you have these files save them into a directory
edit this variable to show the location (directory path) of these files.
Each group of subcriteria are evaluated in the seperate workflows
and all will be evaluated by this main workflow.
The options are available to:
evaluate_d
YES
recreate_from_source_d
YES
evaluate_a
YES
recreate_from_source_a
YES
evaluate_b
CriterionD: The Primary Biotic Variable
Criterion E: The Probability of Ecosystem Collapse
Criterion A: Decline in Ecosystem Distribution
Criterion B: Restricted Distribution
Criterion C: Decline in Abiotic Processes
Collect all results
Subcriteria Summary Table Showing All
Ecosystem Risk Estimates
.IUCN_EcosystemRiskAssessment_mountainashforests_v1_3_1.Ecosystem Risk Estimates
File Tools Help
> projectdir <- "~/projects/IUCN_EcosystemRiskAssessment_mountainashforests"
> ## Subcriteria Summary Table Showing All
> library("knitr")
> library("reshape")
> results_tab2 <- read.csv(file.path(projectdir, "results/subcriteria_summary_table_showing_all.csv"))
> kable(results_tab2, row.names = F)
sub_criterion	A	B	C	D	E
Sub-criterion 1	LC	EN	NA	CR	CR-39
Sub-criterion 2	LC	LC	CR-LC	CR-39	NA
Sub-criterion 3	LC	VU	NA	CR	NA
0 results found.

Provenance Information

File Edit View Workflow Tools Window Help

Tag workflow: select or type tag and press enter

View: Reporting

Items Of Interest

- projectdir
- Ecosystem Risk Estimates
- CriterionD: The Primary Bio
- Criterion E: The Probability
- Criterion A: Decline in Ecos
- Criterion B: Restricted Distri
- Criterion C: Decline in Abiot
- mountain_ash_stags_and_
- Subcriteria Summary Table
- Collect all results
- evaluate_d
- recreate_from_source_d
- evaluate_a
- recreate_from_source_a
- evaluate_b
- recreate_from_source_b
- evaluate_c

Show Attributes

Report Formatting Items

- section
- hr
- text
- image

Properties

Property	Value

Report Designer | **Report Viewer**

Title:

Drag items here
to create a report

Workflow Run Manager

Refresh | Local

Tags	Workflow Name	Run Date	Duration	User
	IUCN_EcosystemRiskAssessment_mountainas...	Jul 13, 2015 5:37:59 AM	00:38:59	s.guru_uq
	IUCN_EcosystemRiskAssessment_mountainas...	Jul 13, 2015 2:51:31 AM	00:09:50	s.guru_uq
	IUCN_EcosystemRiskAssessment_mountainas...	Jul 13, 2015 2:51:10 AM	00:00:08	s.guru_uq
	IUCN_EcosystemRiskAssessment_mountainas...	Jul 7, 2015 2:54:06 AM	00:03:33	s.guru_uq
	IUCN_EcosystemRiskAssessment_mountainas...	Jul 6, 2015 10:46:19 PM	00:07:33	s.guru_uq
	IUCN_EcosystemRiskAssessment_mountainas...	Jul 6, 2015 10:33:45 PM	00:07:38	s.guru_uq
	IUCN_EcosystemRiskAssessment_mountainas...	Jul 1, 2015 2:52:35 AM	00:09:24	s.guru_uq
	IUCN_EcosystemRiskAssessment_mountainas...	Jun 30, 2015 2:53:43 AM	00:09:44	s.guru_uq
	criterionA3_test	Jun 29, 2015 4:45:08 AM	00:00:13	s.guru_uq
	criterionA3_test	Jun 29, 2015 4:26:43 AM	00:00:12	s.guru_uq

TERN
Terrestrial Ecosystem Research Network

Governance

- Accessible from Google chrome browser
- For research purpose only
- Keep only research related data in personal and public folder
- We have rights to refuse access to any users.

TERN
Terrestrial Ecosystem Research Network

CoESRA

- ✓ Access to cloud-based linux desktop via a browser
- ✓ Virtual desktop comes with Kepler scientific workflow and other tools
- ✓ Both personal and public storage space
- ✓ Ability to distribute the execution
- ✓ Free to use, build and/or execute workflows.

Access CoESRA website → Register/login → Access to virtual desktop

TERN
Terrestrial Ecosystem Research Network

Access your virtual desktop by visiting

www.coesra.org.au

Contact us if your institution is not part of AAF

TERN
Terrestrial Ecosystem Research Network

Project Sponsors

collaborators

TERN is supported by the Australian Government through the National Collaborative Research Infrastructure Strategy and the Super Science Initiative

More information

TERN website: www.tern.org.au,
www.coesra.org.au

Thank you

s.guru@uq.edu.au

CC BY SA

TERN
Terrestrial Ecosystem Research Network